Color	Type	Technology	Case
Red	4 power chips, 1 x 1 mm^2 each	AlInGaP/GaAs	TO-39

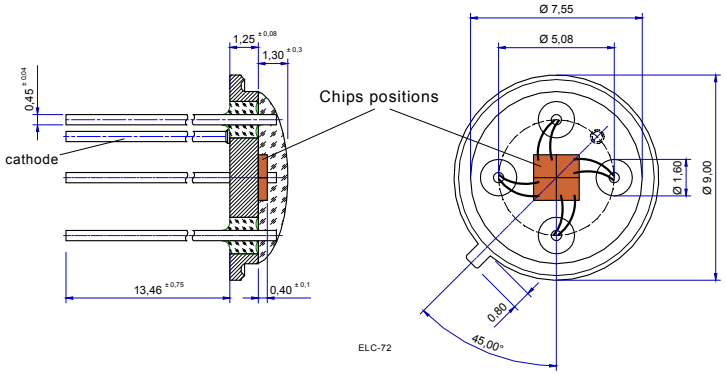

Maximum Ratings*

T_{amb} = 25°C, unless otherwise specified

Parameter	Test conditions	Symbol	Value	Unit
Forward current (DC)		I_F	300	mA
Peak forward current	($t_P \leq 50$ µs, t_P /T = 1/2)	I_{FM}	1000	mA
Reverse current	V_R= 5 V	I_R	10	µA
Operating temperature range		T_{amb}	-20 to +100	°C
Storage temperature range		T_{stg}	-55 to +100	°C

Optical and Electrical Characteristics**

T_{amb} = 25°C, unless otherwise specified

Parameter	Test conditions	Symbol	Min	Typ	Max	Unit
Forward voltage	I_F = 100 mA	V_F		1.9	2.4	V
Reverse voltage	I_R = 10 µA	V_R	5			V
Radiant power	I_F = 100 mA	Φ_e	8	11		mW
Radiant intensity	I_F = 100 mA	I_e		4.8		mW/sr
Luminous flux	I_F = 100 mA	Φ_V	1.3	1.9		lm
Luminous intensity	I_F = 100 mA	I_V	360	520		mcd
Peak wavelength	I_F = 100 mA	λ_p		635		nm
Dominant wavelength	I_F = 100 mA	λ_d	626	630	639	nm
Spectral bandwidth at 50%	I_F = 100 mA	$\Delta\lambda_{0.5}$		19		nm
Viewing angle		φ		120		deg.
Switching time	I_F = 100 mA	t_r, t_f		100		ns

*4 chips connected in parallel. Proper heat sinking is required to maintain correct device operation and reliability at currents higher than 100 mA.

EPIGAP Optoelektronik GmbH, D-12555 Berlin, Köpenicker Str. 325 b, Hs. 201, Tel.: +49-30-6576 2543, Fax.: +49-30-6576 2545