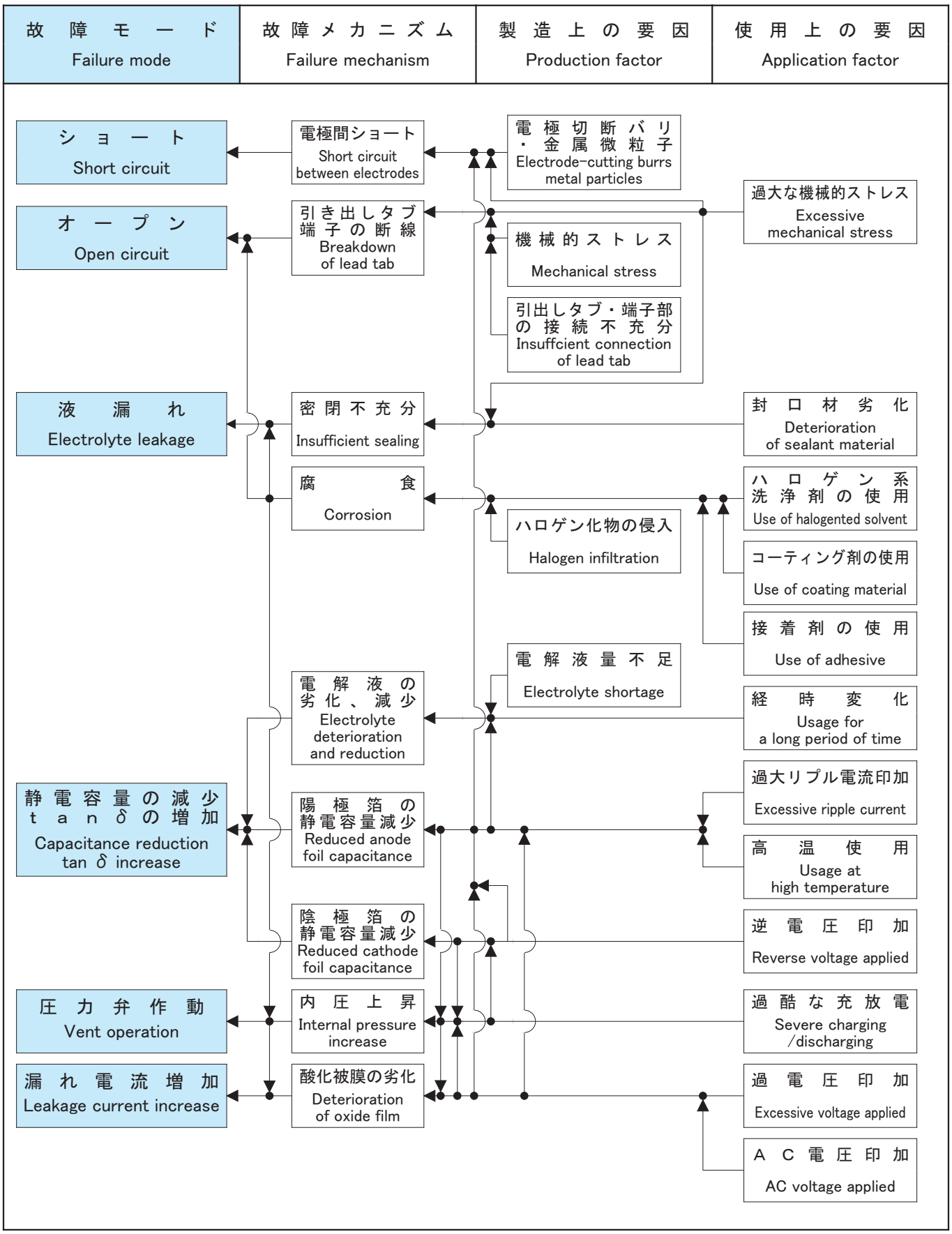代表的な故障モードとその要因　TYPICAL FAILURE MODES AND THEIR FACTORS